BF 43 Hanseatic

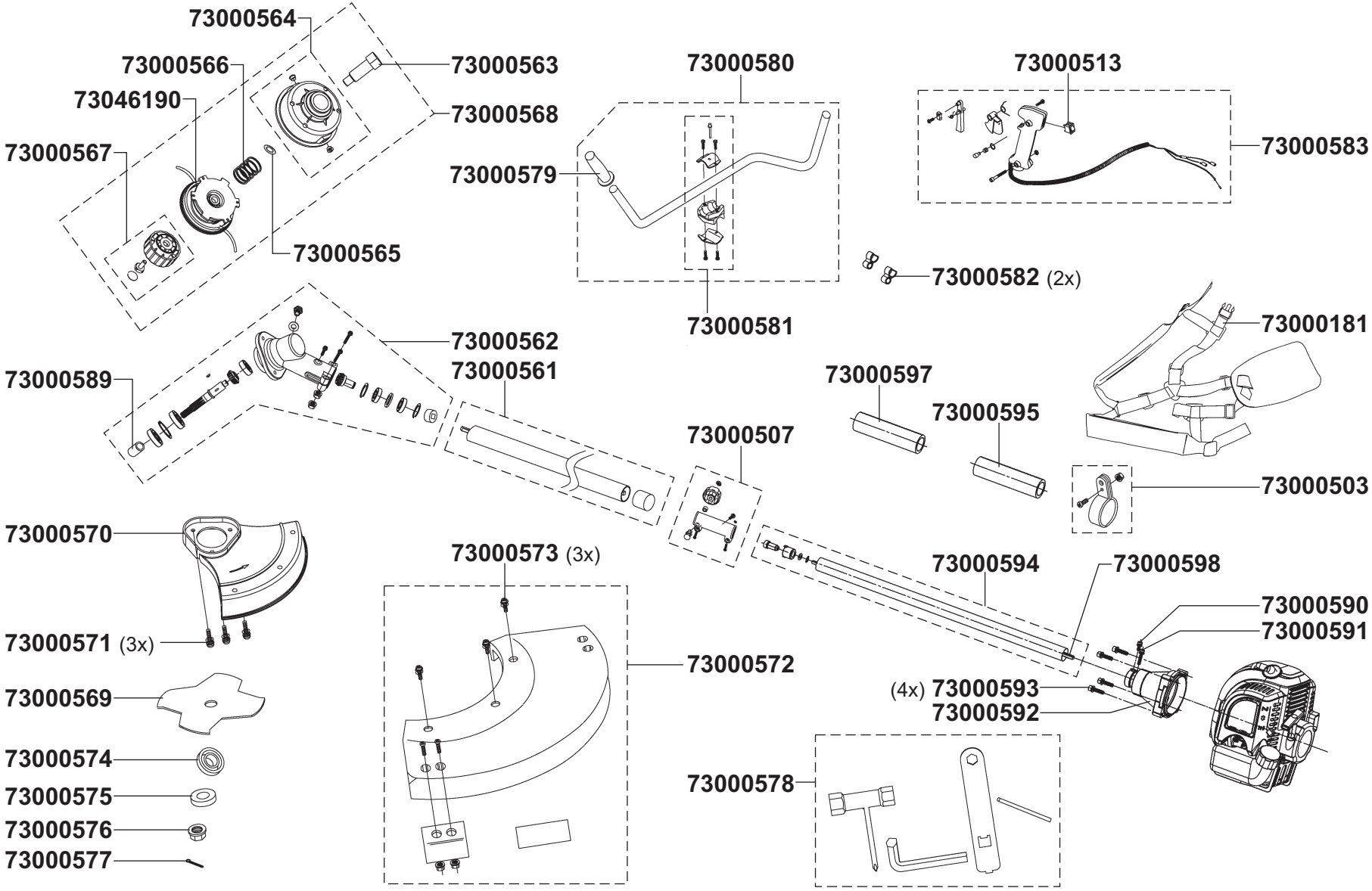
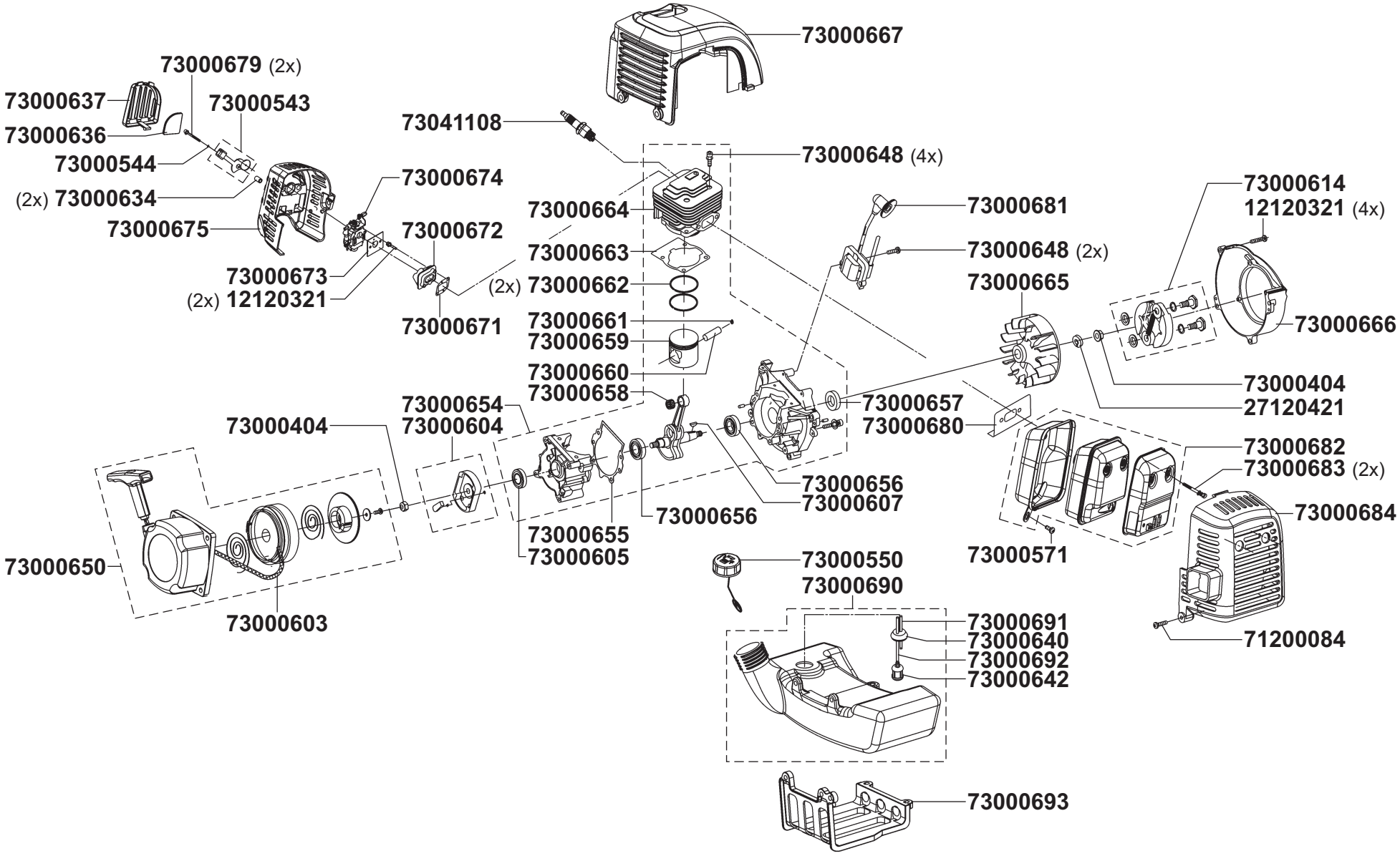
BF 43 Hanseatic